| SH. 1 OF 1 | CAT NO 450-12 | CUSTOMER DIMENSIONS | DO NOT SEPARATE PRINT FROM | LOT NO |
|---|---|---|---|---|

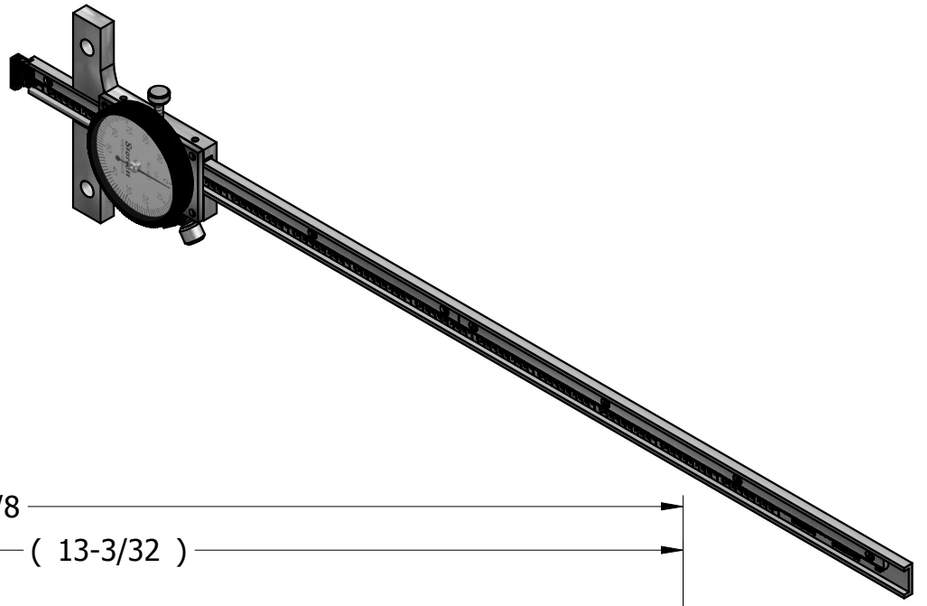

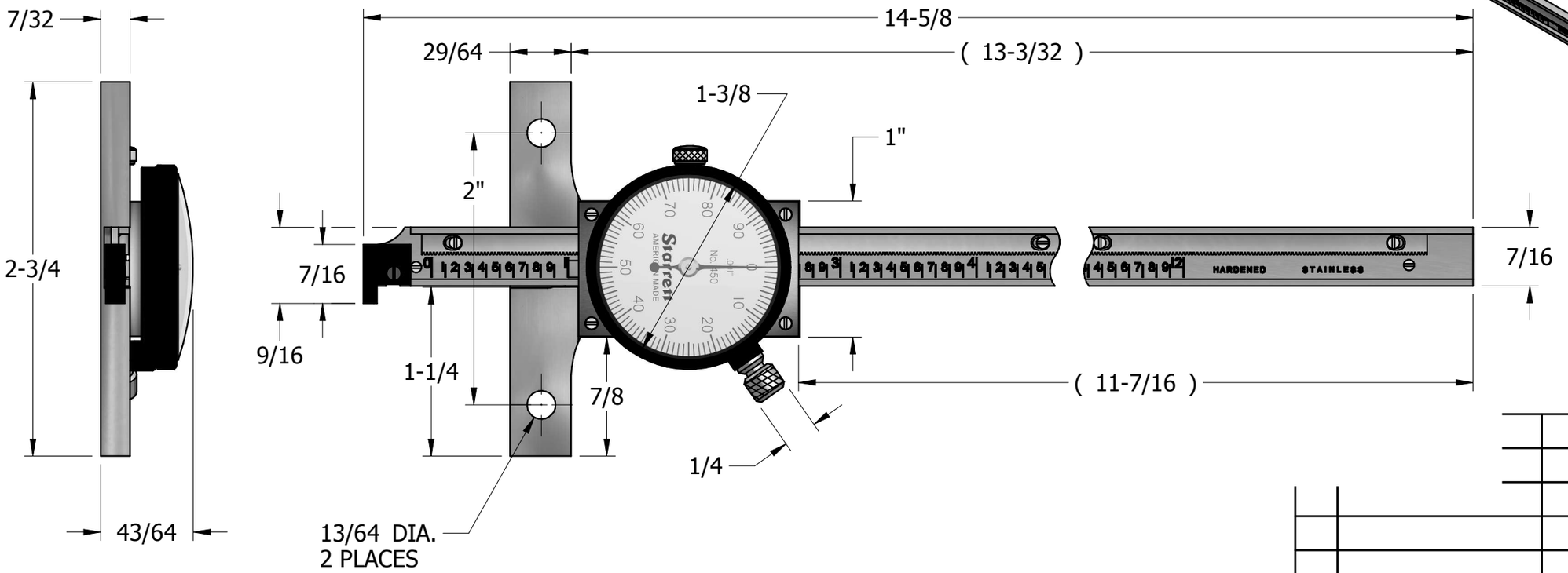


| REV | DESCRIPTION | DATE | BY |
|---|---|---|---|
| | | | |
| | | | |
| | | | |

| DR JMR | CHK | DATE 4/2/15 |
|---|---|---|

DIAL DEPTH
GAGE ASSEMBLY

FRACTIONAL TOLERANCE +- 1/64 UNLESS OTHERWISE NOTED

THE L.S. STARRETT CO.
ATHOL, MASS.